Sydney Live Steam Locomotive Society
Anthony Road, West Ryde, N.S.W.

Newsletter
Correspondence.
The Editor,
P.O. Box 124.
West Ryde. 2114.
N.S.W.

'Newsletter'

Vol.17 No. 2

May 1989

Convention 1989.

This report on the 1989 Easter Convention comes from Rod Brown, one of the foundation members of the S.L.S.L.S. now resident in Maitland.

This Easter saw the 33rd Annual Convention held at the Lake Macquarie Live Steam Locomotive track at Edgeworth.

Much has taken place on these grounds since the last Convention was held here in 1985. Notably the rebuilding of the walls of the Club House and better canteen facilities, various steel overbridges, rumor has it that the latest and longest " fell off the back f a truck " but it must have been some truck... When it is completely installed it will enhance the safety aspect considerably.

Also for special note is the new signal box, a solid brick structure which replaces the old one burned down by vandals some time ago. A sign on the door, above the " Signal Engineers Branch " intimates that " God lives inside " Whether this implies that the building has been "dedicated" I do not know but I understand that the entire signalling system has been devised and constructed by two young members of the Society, Des Lamb and Andrew O'Donnell, their fathers also being part of the team.

It is a work of epic proportions and these young men deserve the fullest praise possible for the successful completion of a major undertaking and the dedication necessary to complete it.

Of the many folk present, not a great number I could name but many faces were familiar. I was pleased to see Ken Tinkler from Melbourne, also Bill and Kath Chalmers and many others, of course from Sydney and surrounding Clubs. Keith Watson from Perth was among those interested and enthusiastic about the 7¼" gauge track. This literally disappears into "Crocodile Country" and has been a major project of the club.

The variety and size of locomotives present form an interesting comparison to the situation in days gone by. At the first convention a 3½" gauge engine was considered large and there were not many 5" locos about. This Convention saw all sizes from 3½" gauge to a massive Union Pacific 4-8-4 ,7¼", and a large petrol electric, 7¼", owned by Dennis and Toni Gilmore. This had a fully enclosed cab with wind up windows, so one was fully protected from the rain (of which there was plenty). In between these there were all sizes of 3½" and 5" gauge locomotives. An interesting speculation could be on the future development of the hobby. Will things be made even larger? How big? Or perhaps how small? Many new and sophisticated materials will become available eg., ceramics, so, another 33 years could be interesting.

All who were present would vote the Convention a great success in spite of all the rain and unpleasant conditions, everyone seemed to accept the situation and had a good time.

Supplies of books, drawings, tools and materials were looked after by Ernie Winter and his wife, also other suppliers whose names I do not know.

Finally a tribute to the organisation of the event by the committee and members of the Lake Macquarie Society, it is a very big undertaking and involves a colossal amount of organisation and plain HARD WORK. Full marks to the Apex Club for their attention to meals. No "tenders were left unfilled to my knowledge.

To the Ladies who manned (or should I say Ladied) the canteen and kept up a supply of hot drinks and all manner of eatables. Thankyou for a job well done.

Rod Brown.

Live Steam in the British Isles. cont. Hugh Ryan.

A visit was made to the East Somerset Railway, based at Cranmore Station, which has track and locomotives permitting round trips of four miles. The railway is a registered charity of historical and educational interest, run by one full time employee and volunteers. The line was once part of the G.W.R., then British Rail but was closed to regular traffic in 1963. The East Somerset Railway has three locomotives in steam, a Class 9F " Black Prince", a Class 4MT 4-6-0 " the Green Knight " and a class 3F 0-6-0 " Jinty ". Several others were in the process of restoration including a Dubs 0-4-4 crane locomotive. The railway has several coaching stock and wagon units, also a workshop with equipment for heavy repairs.

A privately operated 7¼" gauge model railway track was discovered in the town of Rode near Shepton Mallet, Somerset, on the same day. This is located in a large park featuring birds, caged and roaming free. Two " Sweet Pea " type locomotives were operating carrying passengers over a level track about half a mile in length winding between the trees of the park. I was invited to drive one of the runs which invitation was accepted with pleasure and set off with a load of passengers. Because the line has blind corners there were notices here and there requesting the sounding of the whistle to warn people who may be crossing the track further on. The trouble was that some of the birds running free had learned to mimic the sound of the whistle perfectly. It was a bit disconcerting to hear steam whistles coming from all directions, in front, behind and up in the trees while concentrating on driving. There seemed to be dozens of locomotives on the same single ground level track going in all directions even head on. Some of the larger birds, including peacocks, were sitting in the middle of the track refusing to move until whistled at furiously, which, of course, set off all the others including the one on the track. All part of the service, at 40p a ride I was told.

The final live steam visit, the day before we left for home, was at the new track of the Witney and West Oxfordshire model railway in the process of completion at Cutteslow Park, Oxford. Readers of the "Model Engineer" will recall that the club was obliged to leave its former track in the grounds of Blenheim Palace because the owner, the Duke of Marlborough, wanted the club to run for the public seven days per week in the tourist season, an impossibility with volunteer members. The local council welcomed the clubs move with open arms and afforded much assistance. Unfortunatly it rained heavily during part of the afternoon but I was able to drive another "Sweet PEA" 5" gauge this time with a smokebox door painted to resemble "Thomas the Tank Engine"

.....

Duty Roster.

Jun. '89. B.Hurst,B.Tulloch,A.Eyre,J.Hyde,B.Rawlinson,G.Esdaile,A.Austin.
Jul. '89. B.Peake,W.Allison,J.Murray,J.Leishman,W.Edgecombe,V.Condon.
Aug. '89. T.Arney,G.Farkas,P.Dunn,M.Tyson,H.Ryan,K.Gapes,K.McMahon.
Sep. '89. W.Richards,T.Geraghty,W.Sandberg,J.Ranford,J.Hagan,H.Spencer,A.Cottrell.

Gate Roster.

June J.L.Hurst, July M.Haynes, August P.Sharpe, September C.Wear,
October G.Sharp, November P.Brotchie, December P.Shiels.

Annual General Meeting

This meeting will be held on Tuesday June 6th at the club house on our grounds at West Ryde.

25th. Anniversary.

Several of our members visited the Illawarra Live Steamers to join in celebrations of their 25th. Anniversary. Their new ground level track was opened. The track is of excellent quality with curves and transitions spot on. To add interest the track runs out into natural bushland and back.

1948 and the Powerhouse.

Early this week I had the pleasure of viewing a 5" gauge static model of a Z19 class built by Barry Potter for the Powerhouse Museum. Those familiar with the quality of Barry's work will realise that the Museum has at least one model of N.S.W. prototype of exceptional standard. It will go on display where Barry's D5201 has sat for the last year, it is a fine piece of model engineering.

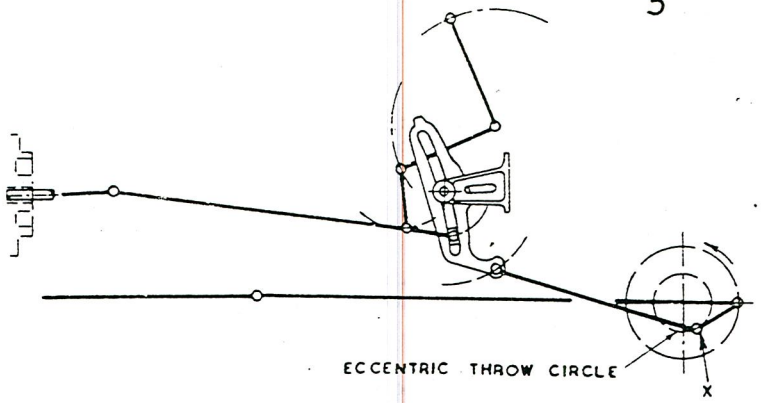

FIG. 52-2.

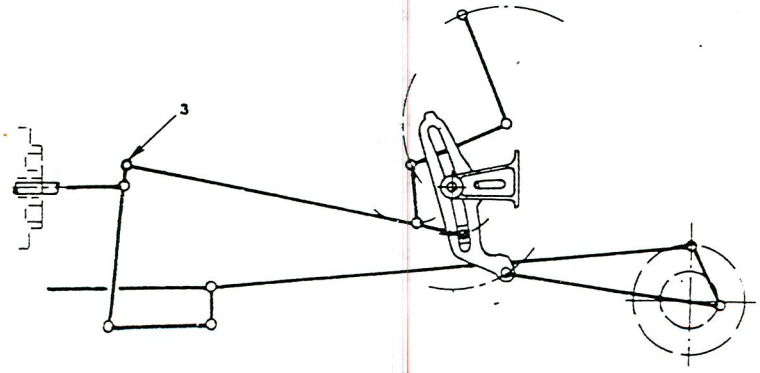

FIG. 52-3.

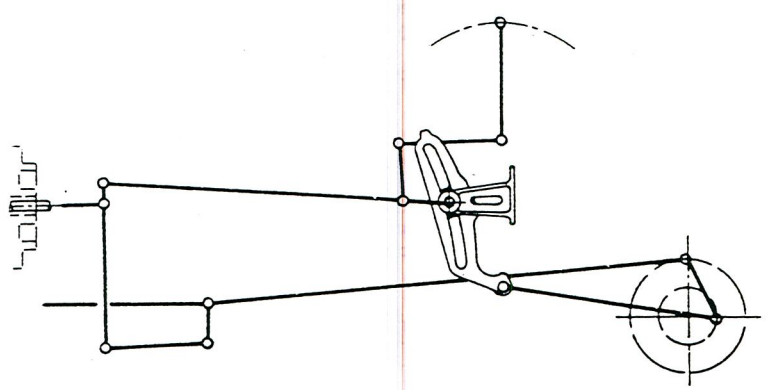

FIG. 52-4.

already indicated, the valve movement, which will then be equal to twice the lap plus twice the lead, will be due entirely to the influence of the crosshead.

As the block is raised from mid-position toward the top of the link, the influence of the return crank will again be felt, the valve travel gradually increasing until the block reaches full back gear position; see FIG. 52-5. Since the link is pivoted at X, however, the motion is indirect; consequently, the link, by functioning as a reverse rocker, will cause the valve to move in a direction opposite to that in fore gear and admit steam to the other end of the cylinder.

52-7 POSITION OF ECCENTRIC OR RETURN CRANK

The angle θ, FIG. 52-1, at which the return crank must be set in relation to the crank, is affected by the position of the link foot pin 14 with respect to a line AB passing through the centres of the crankpin and crank axle when the engine is on front dead centre. If the link foot pin is located on this line, the return crank pin must lead or follow the crank by 90 degrees, depending on whether outside or inside admission valves are used.

To conform with this condition, however, would entail the use of an abnormally long link foot. This would reduce the oscillation of the link and result in a shorter valve travel, unless the radius of the return crank were correspondingly increased.

To partially compensate for the error produced by the angular setting of the eccentric rod 9, the return crank pin must be offset from the 90 degree setting by an amount equal to the angle of elevation of the foot pin above the line AB. This angle is usually about 4 degrees.

Thus, in the case of an outside admission valve engine, the return crank must be set to lead the crank by an angle of 90 - 4 = 86 degrees, while for an inside admission valve engine, the return crank must follow the crank by 90 + 4 = 94 degrees.

It should be understood, however, that although this correction will improve the engine performance in fore gear, it will adversely affect the steam distribution in back gear. For this reason, it is applied only to C36, C38, D57, and D58 class engines, which normally operate under full load in fore gear.

52-8 LOCATION OF RADIUS ROD CONNECTION TO COMBINATION LEVER

Referring to FIG. 52-6(a), it will be seen that for outside admission valves the radius rod is attached to the combination lever at a point beneath the point of attachment of the valve rod. For inside admission valves, however, the following alterations to the valve gear are necessary, since,

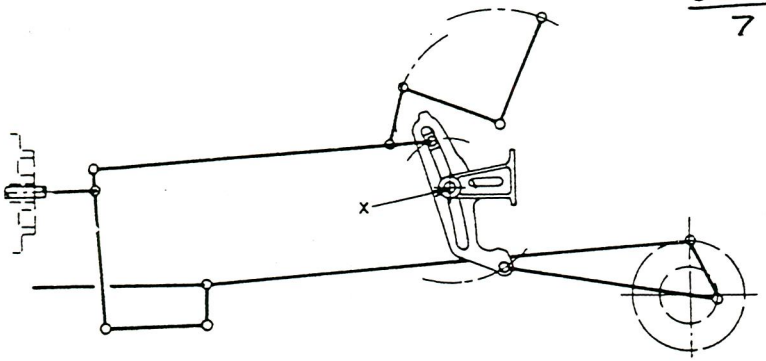

FIG. 52-5.

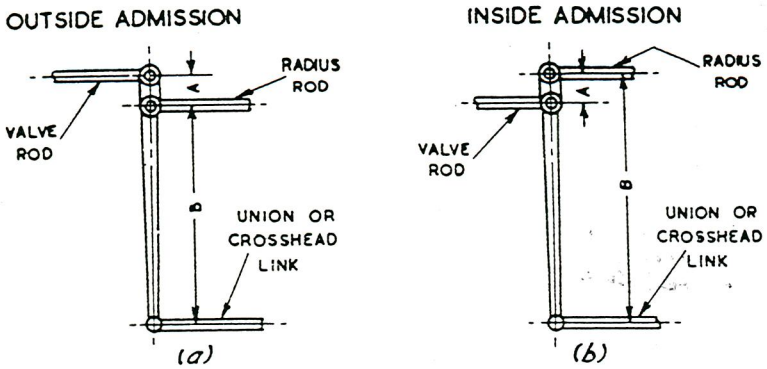

FIG. 52-6.

in this case, the valve must be moved in the opposite direction.

(a) The return crank, instead of being set to lead the crank, must be set to follow the crank as already indicated.

(b) The points of attachment of the radius rod and valve rod must be reversed; the radius rod is thus attached to the combination lever above the point of attachment of the valve rod, see FIG. 52-6(b).

52-9 ADVANTAGES OF THE WALSCHAERT VALVE GEAR

The following advantages are claimed for the Walschaert valve gear over shifting link gears:-

(a) Being outside the frame, it is more accessible; consequently, oiling, inspection, and maintenance are facilitated.

(b) Constant leads are obtained at all points of cut-off.

(c) Reduction in weight.

(d) Friction and wear, due to the reduced area of wearing surfaces, are correspondingly decreased.

(e) Greater permanency of adjustment.

(f) Smoother running, less lost motion, and a reduction in the tendency of the motion to spring or yield when in operation.

(g) Since the expansion link is vertical, any movement of the driving axle relative to the frame when riding over uneven tracks, will not appreciably alter the steam distribution.

52-10 SETTING THE WALSCHAERT VALVE GEAR

The method of setting the Walschaert valve gear to ensure the most effective steam distribution varies in different shops and for different engines. If the port opening positions have already been marked on the valve spindles, and the dead centre positions of each crank pin have been located, the following general procedure can be adopted:-

(a) Check over the engine for lost motion in the valve gear, axle boxes, etc., and make all necessary corrections.

(b) Checking the setting of the Return Crank

Set the engine on front dead centre, with the link block in Full Fore gear position. Locate one leg of a trammel in a centre dot mark in the steam chest cover, or some other adjacent and stationary part of the engine, and scribe an arc on the pin connecting the radius rod to the combination lever; see FIG. 52-7(a).

Set the engine on back dead centre and scribe a second arc on the pin; see FIG. 52-7(b). If both arcs coincide, the return crank setting is correct. If not, the return crank pin must be adjusted toward or away from the wheel centre until they do coincide.

NOTE:- The position of the return crank is fixed in the workshop and rarely requires correction. If an error does exist it will usually entail replacement of the main crank pin.